Role of size effect in the stabilization of *in situ* superconducting tapes

G. Horváth and J. Bánkuti

Department for Low Temperature Physics, Roland Eötvös University, H-1088 Budapest VIII, Puskin u. 5–7, Hungary

Received 20 December 1988; revised 27 February 1989

Calculation of the electrical resistivity of *in situ* filamentary superconducting composite tapes in the normal state taking the size effect into consideration is made. The interfilamentary resistivity can be very large because of the size effect, but it can be shown that the transverse resistivity does not significantly increase. Thus the eddy currents, which are responsible for a large fraction of the a.c. losses cannot be suppressed. The longitudinal resistivity can be suitably small in spite of the size effect, so all the current can be carried with small power dissipation by the matrix if some regions of the superconductor are in the normal state. Size effect is not seen to play an important role in *in situ* filamentary superconducting tapes, therefore it cannot be used for stabilization in these systems, as in continuous filamentary superconducting tapes.

Keywords: superconductivity; superconductor stability; resistivity; *in situ* composites; size effects

The resistivity of multifilamentary superconducting wires and tapes, in the normal state is one of the most important parameters for the design and the optimization of a superconducting system. When the multifilamentary conductor goes to the normal state because of some irregularities the current will be carried by the whole volume of the conductor. For a decrease of the current consumption in the superconducting filaments the longitudinal resistivity of matrix of the multifilamentary wire had to be smaller. In this case the important part of current can be carried by the non-superconducting matrix. In a.c. electrical or magnetic fields there is an essential contribution to energy losses from the arising eddy currents. These currents flow in a transverse direction and to decrease energy losses the transverse component of the normal matrix had to be large to eliminate the eddy currents. Thus the longitudinal resistivity, $\rho_{\parallel}$ of multifilamentary superconducting composites in the normal state determines the current flow power dissipation, and the transverse resistivity, $\rho_{\perp}$, is an important parameter of the composite superconductor in relation to the a.c. losses. At present wires and tapes consisting of a few thousand superconducting thin filaments in a normal metal matrix with small residual resistivity are most frequently used.

Several experimental and theoretical works on the superconducting wires and tapes have been described[1–16], but the importance of size effect on the normal resistivity of such superconducting systems has only recently been recognized. Drobin *et al.* developed a method to directly measure the transverse and the longitudinal resistivities of a normal matrix in commercial continuous multifilamentary superconducting wires and tapes. They also investigated the size and proximity effects in these systems[1,2]. There are several other methods for the indirect determination of $\rho_{\parallel}$ and $\rho_{\perp}$ (References 3 and 4). Taking into account the size effect, numerical calculations of $\rho_{\parallel}$ and $\rho_{\perp}$ of the multifilamentary superconducting wires in the normal state were performed[5,6]. Other authors also investigated the normal resistivity of these wires and tapes considering the size effect[7–9].

If one of the dimensions of a conductor is smaller than the bulk mean free path of the conducting electrons, then the electrical resistivity rises because of the diffuse scattering of the electrons on the boundary surfaces of the conductor. This resistivity increase is called the size effect. Size effect can play a more important role in the interfilamentary resistivity of granular or filamentary (*in situ*) superconducting composites, because the superconducting filaments are closely associated in these systems. Several studies have been made on the normal resistivity of *in situ* filamentary superconducting composites[10–16], but the size effect on the electron transport in the normal state has not yet been investigated in these systems.

The transverse resistivity of the matrix has to be as large as possible to suppress the eddy currents, which are responsible for a sizeable fraction of the a.c. losses. On the other hand the longitudinal resistivity of the matrix must be as small as possible, to minimize power dissipation and the concomitant temperature rise if some regions of the superconductor suddenly return to the normal state, when nearly all the current will be carried by the matrix[5].

In this work it is shown that for *in situ* filamentary

0011-2275/89/090931-04 $03.00

superconducting composite tapes the transverse resistivity of the matrix will not be large in spite of the fact that the interfilamentary resistivity can be very large because of the size effect. The longitudinal resistivity of the matrix can be small even if the resistivity between the filaments increases.

Interfilamentary resistivity increase due to the size effect

Filamentary superconducting composites in which the resistivity of the superconducting filaments in the normal state is much larger than that of the matrix, and therefore regarded as infinite, were investigated. In *in situ* filamentary superconducting composite tapes the long flat filaments are randomly distributed in a normal metal matrix. A diffusive electron scattering at the matrix-superconductor interface in the normal state of superconductor and an isotropic bulk electron mean free path is considered. Under these circumstances the Fuchs–Sondheimer–Lucas theory[17–19] or the model in References 20 and 21 can be used to describe the increase in resistivity between the overlapping filaments. On the basis of these theories the interfilamentary resistivity is

$$\rho_i = \rho_b\left[1 + \frac{8\lambda}{3D\log_e(2\lambda/D)}\right] \qquad D \ll \lambda \tag{1}$$

where ρ_b, λ and D are the resistivity of the bulk matrix, the isotropic bulk electron mean free path and the distance between the overlapping filaments, respectively. If the tape is very elongated and/or flattened the condition $D \ll \lambda$ can be realized.

Calculation of the average bulk resistivity considering the size effect

Using Carr's cell model[12–14], an *in situ* filamentary superconducting composite is considered as a continuum with anisotropic properties averaged over the volume containing the large number of superconducting filaments. In this model only the resistivity of a uniform cell is investigated, and the composite consists of uniform cells. The average resistivity of the composite is equal to the resistivity of one cell.

A uniform cell of the *in situ* filamentary superconducting composite tape can be seen in *Figure 1* where x_1, y_1, z_1, l, w, d, $\tilde{x}\cdot\tilde{y}$ are the side length of the uniform cell and the filament in the directions x, y, z; and the area of the overlapping interfilamentary region, respectively. The

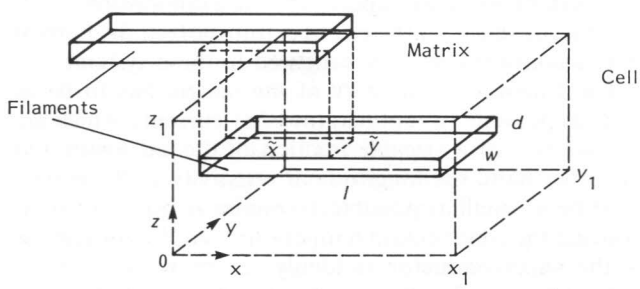

Figure 1 Two neighbouring superconducting filaments overlapped, the interfilamentary region of the matrix and a uniform cell of the *in situ* composite

ment is placed in the uniform cell coaxially. ρ_b, ρ_f and ρ_i are the resistivity of the matrix, the filament and the overlapping interfilamentary region, respectively. The resistivity ρ_f will be taken as infinite, the resistivity ρ_i is increased by the size effect as can be seen in Equation (1). The direction of elongation of the composite is the direction of axis x; and the composite is flattened parallel to the xy surface. It is assumed that $l \gg w \gg d$, so significant size effect only occurs between the overlapping $\tilde{x}\tilde{y}$ surfaces of the neighbouring filaments. The distribution of the resistivity in a cell can be seen in *Figure 2*. Assuming current lines parallel to surfaces, the average resistivity of a uniform cell in the directions x, y, z is

$$\frac{1}{R_x} = \int_0^{z_1}\int_0^{y_1} \frac{\mathrm{d}y\mathrm{d}z}{\int_0^{x_1}\rho(r)\mathrm{d}x}, \quad \frac{1}{R_y} = \int_0^{x_1}\int_0^{z_1} \frac{\mathrm{d}z\mathrm{d}x}{\int_0^{y_1}\rho(r)\mathrm{d}y},$$

$$\frac{1}{R_z} = \int_0^{y_1}\int_0^{x_1} \frac{\mathrm{d}x\mathrm{d}y}{\int_0^{z_1}\rho(r)\mathrm{d}z} \tag{2}$$

On the basis of *Figure 2* and integrating

$$\frac{1}{R_x} = \frac{z_1(y_1-\tilde{y}) + (\tilde{y}-w)d}{\rho_b x_1} + \frac{wd}{\rho_b(x_1-l)+\rho_f l} + \frac{(z_1-d)\tilde{y}}{\rho_i\tilde{x}+\rho_b(x_1-\tilde{x})} \tag{3}$$

$$\frac{1}{R_y} = \frac{z_1(x_1-\tilde{x}) + (\tilde{x}-l)d}{\rho_b y_1} + \frac{ld}{\rho_b(y_1-w)+\rho_f w} + \frac{(z_1-d)\tilde{x}}{\rho_i\tilde{y}+\rho_b(y_1-\tilde{y})} \tag{4}$$

$$\frac{1}{R_z} = \frac{x_1y_1-wl}{\rho_b z_1} + \frac{\tilde{x}\tilde{y}}{\rho_i(z_1-d)+\rho_f d} + \frac{wl-\tilde{x}\tilde{y}}{\rho_b(z_1-d)+\rho_f d} \tag{5}$$

An *in situ* filamentary superconducting tape is elongated and flattened from an initial granular superconducting composite. For the elongation and the flattening the

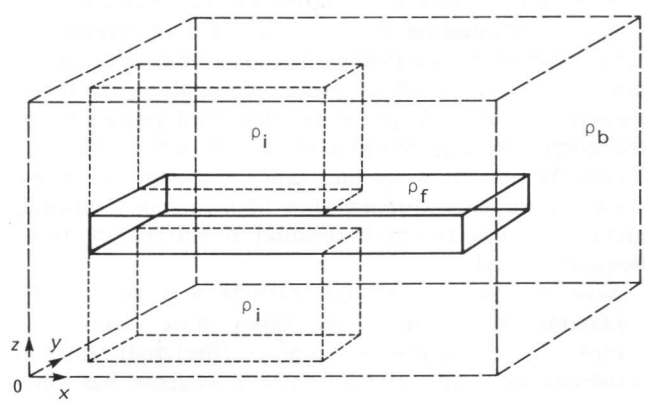

Figure 2 The distribution of the normal resistivity $\rho(x, y, z)$ in a cell of the composite. The origin of the system of co-ordinates is the point 0

following can be written

$$x_1 y_1 z_1 = x_o^3 = lwd/c = l_o^3/c \tag{6}$$

$$E = l/l_o = x_1/x_o, \quad y_1/x_o = w/l_o, \quad z_1/x_o = d/l_o \tag{7}$$

$$k = w/d \tag{8}$$

where x_o, l_o, c, E, k are the initial side length of the composite cell, the average grain size, the superconducting volume ratio, the degree of elongation and flattening, respectively. From Equations (6), (7) and (8) we obtain

$$l = l_o E,\ w = l_o(k/E)^{1/2},\ d = l_o(kE)^{-1/2}$$

$$x_1 = l_o E c^{-1/3},\ y_1 = l_o c^{-1/3}(k/E)^{1/2}$$

$$z_1 = l_o c^{-1/3}(kE)^{-1/2} \tag{9}$$

The average resistivity of an uniform cell, using Equation (9) in the x, y, z directions is

$$\rho_x = R_x y_1 z_1/x_1 = R_x l_o/(E^2 c^{1/3})$$

$$\rho_y = R_y x_1 z_1/y_1 = R_y l_o E/(kc^{1/3})$$

$$\rho_z = R_z x_1 y_1/z_1 = R_z l_o k E c^{-1/3} \tag{10}$$

The filaments have a random distribution in the matrix. This can be taken into account in the Carr's model, so an average overlapping area is assumed with the following average side length.

$$\bar{\bar{x}} = n_x l,\ \bar{\bar{y}} = n_y w \tag{11}$$

Using Equations (3)–(5) and Equations (9)–(11) and substituting $\rho_f = \infty$ into Equations (3)–(5) the direction-dependent average resistivity of the *in situ* filamentary superconducting tape is determined

$$\rho_x = \rho_b \left\{ (1 - c^{1/3})[1 - c^{1/3}(n_y - 1)] + \frac{n_y(1 - c^{1/3})}{\dfrac{n_x \rho_i}{\rho_b} + c^{-1/3} - n_x} \right\}^{-1} \tag{12}$$

$$\rho_y = \rho_b \left\{ (1 - c^{1/3})[1 - c^{1/3}(n_x - 1)] + \frac{n_x(1 - c^{1/3})}{\dfrac{n_y \rho_i}{\rho_b} + c^{-1/3} - n_y} \right\}^{-1} \tag{13}$$

$$\rho_z = \rho_b/(1 - c^{2/3}) \tag{14}$$

Since the composite is elongated in the direction x ($l \gg w \gg d$), the longitudinal resistivity is described by the expression for ρ_x, and the transverse resistivity is described by the expressions of ρ_y and ρ_z. It can be seen that size effect is only important in the longitudinal resistivity and the transverse resistivity of direction y.

In Carr's model the average distance between the overlapping filaments is

$$D = z_1 - d = l_o(kE)^{-1/2}\ (c^{-1/3} - 1) \tag{15}$$

Size effect occurs if $D < \lambda$. From Equations (1) and (13) it can be seen that $\rho_i/\rho_b \gg 1$ when $D \ll \lambda$. D can be small if $kE \gg 1$ at a given l_o and c. So the size effect can increase the interfilamentary resistivity for large elongation ($E \gg 1$) and/or for large flattening ($k \gg 1$) of a composite. In the case of large ρ_i/ρ_b the following expressions can be given for the average longitudinal resistivity and the transverse resistivity of direction y

$$\rho_x = \rho_b\{(1 - c^{1/3})\ [c^{1/3}(1 - n_y) + 1]\}^{-1} \tag{16}$$

$$\rho_y = \rho_b\{(1 - c^{1/3})\ [c^{1/3}(1 - n_x) + 1]\}^{-1} \tag{17}$$

Taking into account $n_x \approx n_y$, because of the random distribution of the initial grains in the matrix, ρ_x and ρ_y are described by the same expression. So the requirement for ρ_y to be large while ρ_x is small, cannot be realized. When ρ_x is small then ρ_y is also small.

From Equations (14), (16) and (17) it can be seen that the average resistivity of a composite only depends on the superconducting volume ratio, so the size effect does not have a significant role. Size effect can only change the interfilamentary resistivity.

Conclusions

The interfilamentary normal resistivity can be very large in *in situ* filamentary superconducting tapes because of the size effect if elongation and flattening of the tape is large. On the other hand the average normal transverse resistivity cannot be large because of the size effect, so the eddy currents, which are responsible for a sizeable fraction of the a.c. losses cannot be suppressed. The average normal longitudinal resistivity remains small for a small superconducting volume ratio in spite of the size effect, so all the current can be carried with small power dissipation by the matrix if some regions of the superconductor go to normal state.

The size effect does not play a significant role in the normal resistivity of *in situ* filamentary superconducting tapes. So size effect cannot be used for stabilization as in the case of conventional, continuous filamentary superconducting tapes or wires. This conclusion can be enforced by the difference of the structure of *in situ* and multifilamentary superconducting tapes. In *in situ* superconducting tapes there is a random distribution of finite filament sections and in this case the appropriate current distribution does not take into account the parts of the conductor with locally enlarged interfilamentary resistivity. This can explain the insensitivity of the size effect in *in situ* superconducting tapes.

The simple geometrical calculation of a uniform cell can be based on the low concentration, c, of the superconducting filaments. In this case the current distribution is very inhomogeneous between the cells because of their random arrangement. The evaluation of this effect is a percolation task described elsewhere. The inhomogeneity of the current lines between the cells is more important than that inside the cells, therefore almost homogeneous

current lines parallel to the surfaces can be assumed inside the cells.

References

1 **Drobin, V.M., Dyachkov, E.I., Khukhareva, I.S., Luppov, V.G. and Nichitiu, A.** *Cryogenics* (1982) **22** 115
2 **Lazar, D.P., Vladimirova, N.M., Drobin, V.M., Dyachkov, E.I. and Khukhareva, I.S.** *Cryogenics* (1986) **26** 152
3 **Davoust, M.E. and Renard, J.C.** *Proc ICEC 6* IPC Science and Technology Press, London, UK (1976) 458
4 **Turck, B.** *Proc ICEC 6* IPC Science and Technology Press, London, UK (1976) 497
5 **Cavalloni, C. and Monnier, R.** *Helv Phys Acta* (1982) **55** 669
6 **Cavalloni, C., Kwasnitza, K. and Monnier, R.** *Appl Phys Lett* (1983) **42** 734
7 **White, A.E., Tinkham, M. and Skocpol, W.I.** *Phys Rev Lett* (1982) **48** 1752
8 **Nakane, F., Uchiyama, T., Nakamura, S., Miyake, S. and Ito, D.** *Proc Int Cryogenic Mater Conf* Kobe, Japan (1982) 203
9 **Kasumov, A.Y., Kopesciy, G.V., Kohancin, L.S. and Matveev, V.N.** *Ph Sol St (USSR)* (1981) **23** 61
10 **Tsuei, C.C.** *Science* (1973) **180** 57
11 **Lobb, C.J.** Technical Report (1980) **16**
12 **Carr, W.J.** *J Appl Phys* (1983) **54** 5911
13 **Carr, W.J.** *J Appl Phys* (1983) **54** 5917
14 **Carr, W.J.** *J Appl Phys* (1974) **45** 929
15 **Lobb, C.J. and Frank, D.J.** *J Phys* (1979) **C12** L827
16 **Lobb, C.J., Tinkham, M. and Skocpol, W.J.** *Sol St Comm* (1978) **27** 1273
17 **Sondheimer, F.H.** *Phys Rev* (1950) **80** 401
18 **Price, P.J.** *IBM J Res Develop* (1960) **4** 152
19 **Lucas, M.S.P.** *Appl Phys Lett* (1964) **4** 73
20 **Horváth, G. and Bánkuti, J.** *Physica Status Solidi* (1988) **A110** 549
21 **Bánkuti, J. and Horváth, G.** *Physica Status Solidi* (1989) **A111** 185